8. MAINTENANCE

8.1 Periodic maintenance

The QMS 112 requires no periodic maintenance.

8.2 Zero point calibration, post amplifier

Calibrate the zero point on the post amplifier using the ZERO potentiometer as follows:

- Turn off the control unit
- Disconnect the cable to the QME
- Turn the control unit on again and let it warm up for 5 to 10 minutes.
- Make the following switch settings

  DVM: ELECTROM. SCAN SPEED: 10 ms/amu
  GAIN: x100 MODE: EMISSION OFF

- Set the ZERO trimmer potentiometer on the front panel to a DVM display of .000 ± .002.
- Check the display for all SPEED settings. It must remain within ±.003.
- If you intend to use the electrometer output signals available at the recepticles on the back panel, you can connect them to a voltmeter to check their zero points. There the deviation should remain within ± 50 mV.
- Set GAIN to x1. The display must be within ±.001
- Turn off the control unit and reconnect the cable to the QME

8.3 Troubleshooting

Symptom	Possible cause	Locating the fault	Correction
Display remains dark when the control unit is turned on even through the mains power is connected.	Break in the power cable	Use a new power cable	Repair old power cable
	Fuses F1, F2 have responded.	Make visual control	Use a new fuse with a value corresponding to the information in the POWER CONNECTION section.
	Fuse F1 on the VR 112 24 V controller has responded.	LED D5 on the bottom of the VR 112 is dark	Turn off power and replace fuse
	Short circuit in the supply voltage from an external unit	Disconnect cable at the QME and QDP connections	Repair the external unit at fault
Fuses F1, F2 continually blow	Incorrect fuse value	Visual control	Replace with a fuse with a value corresponding to the information in the POWER CONNECTION section.
	Unit not adapted to the local mains voltage	Compare the information on the nameplate with the local mains data	Convert to local power as described in the POWER CONNECTION section.
The measurement instrument does not react to manipulations on the front panel.	External control plugged into the QDP recepticle.	Visual control	Unplug cable for manual operation.
	The cable between FP – MS is loose inside the QMS.	Visual control	Plug into J1.

9. DETAILED DESCRIPTION
(see schematics BG 541 317 -S)

The QMS 112A can be divided into three general sections:

- FP 112A — Front panel with the control and display elements
- MS 112 — Master board with all the circuits for the scan,the electrometer controller and the rest of the control signals for the QME 112.
- VR 112 — Switching controller for the generation of the +24V and –24V primary voltages from one VR 112 module for each voltage.

9.1 FP 112A front panel
(refer to schematics BG 541 316 -S)

The front panel consists of the basic pc board and the display board. This latter is mounted on the basic board as a piggy-back board and is connected to the basic board with a ribbon cable (J10). A ribbon cable is also used to connect the front panel module to to the MS 112 via J1. The QDP remote control connection is wired parallel to this (refer to the REMOTE CONTROL section for a description of the remote control interface).

9.1.1 Supplies

With the LED bar display as the single exception, the display board only needs a +5V supply voltage (TP9 with reference to TP10). It is generated by a DC/DC converter connected to the +24V primary voltage supply and conducted to the board via connector J2 on the basic board.

The other voltages are generated on the MS 112 and supplied via connection J1.

- –15 V — reduced to –5.1 V (TP6) by Zener diode D1 to supply A/D converter N6
- +12 V — (TP7) to supply the CMOS chip on the basic board and the LED bargraph display on the display board. Reference is DIG GND (TP8)
- $+U_{REF}$ — referenced to REF GND (TP0) as an exact 10 V reference voltage for the LED bargraph display, the set point potentiometer and for the DVM's A/D converter (over a voltage divider)

9.1.2 Display

With the exception of the signal adaptation, the entire display section is located on the display pc board.

9.1.2.1 DVM digital voltmeter

The 3 1/2 place DVM is formed from the N6 A/D converter which directly drives the 7-segment LED display. Its external circuits define its own oscillator frequency and the integrator time constant.

The reference voltage is set at 1 V (TP1 referenced to TP0) on the basic board with R57, R58, and R59.

The analog input signal is set on the DVM S1 switch. A second level controls the decimal point according to the switch setting and the unit of measurement of the signal being displayed.

- ELECTROM setting:

  The electrometer measured data signal is input on the EC+ (with EC-reference) line to the MS 112 master board where it is processed and filtered and subsequently scaled on voltage dividers R50..R52 from 10 V FS to 1 V FS. It is then conducted to the DVM. The unit of measurement is dependent on the GAIN selected for post amplification:

  - No unit of measurement indication lights with x1..x100. The DVM shows the mantissa for the measurement range on the exponent display.
  - On AUTO the "V" (D6) unit lights for volt.

- MASS setting:

  The output signal for the scan (SCAN+) is scaled in the R53...R55 voltage divider for the mass ranges 0..100 to 1V FS and for the mass range 0...200 to 2 V FS. The selection for the DVM is made with jumpers J6 or J7. In addition, the mass unit "u" (D4) and the decimal point at digit N5 also appear.

- EMISSION setting:

  As a first step the DSP EMIS L control signal for the switching command to the QME is activated.

  The emission current value now on the EC lines is scaled in voltage divider R50..R52 to 0.5 V FS and then conducted to the DVM. The "mA" unit of measurement (D5) and the decimal point at digit N4 are displayed.

9.1.2.2 LED bar display

The LED bar display is formed from the N1 bargraph controller and the D16 ..D18 row of LED's.

The display processes directly the EC+ data coming from the MS 112 in the range from 0 ... +10 V as the measurement signal. Resistor R97 and diode D73 limit the measured data signal for the bargraph controller to a positive value.

9.1.2.3 Exponent display

The exponent display comprises the 1 1/2 digit 7 segment display, the N11 "BCD to 7-segment" decoder and the "A" , "mbar", " ⚠ ", "LIN" and "AUTO" LED displays.

These displays are controlled by EXP-PROM N12 (refer to the RANGE/GAIN CODING table)

The EXP–PROM is addressed by the RANGE, GAIN and MODE control signals which are converted from +12V V CMOS logic to TTL logic by N16 and N18 on the basic board.

When selecting emission current measurement i.e. DSP EMIS L = low at which the LED bargraph display becomes invalid and the exponent display is disabled, the N11 "BCD to 7–segment" decoder and the N7 LED driver are switched to high impedance.

9.1.2.4 Operational status display

The EM o.k. and SCAN status LED's are open collector controlled directly by the MS 112 via the EMIS OK L and SCAN IN PROGRESS L lines. Both light when the signal goes low.

9.1.3 Digital control section

The RANGE, GAIN, SPEED, SCAN and MODE (S2..S6) switch settings go directly to the MS 112 connection line (via J1) over coding diodes. In active status a digital transmission line such as SPEED 0 L is pulled low over the diode and the switch. In inactive status i.e. when the switch is open, the transmission lines remain high ohmic (open collector principle). Pull-up resistors on the master board make the potential unmistakable in this latter case.

In remote control operation i.e. ON LINE L = low, the FET's H3 and H4 are blocked and thus all switches are placed on positive potential (REMOTE H). The coding diodes are effective in the blocked direction, which effectively disables the switches.

When the emission current measurement is selected on the DVM switch, the DSP EMIS L digital transmission line is activated by the EMIS L = low signal and switched off via N15 FET H3. This disables the RANGE and GAIN switches and generates the x1 (refer to the RANGE/GAIN CODING table) post amplification factor required for the emission current measurement. The other switches remain in function.

RANGE /GAIN coding with exponent display:

Inputs						Display Outputs			
RANGE Selector	GAIN Selector	RANGE Signal		GAIN Signal		Scale LED	Exponent 10 EXP ...		
		1 L	0 L	1 L	0 L		SEV ON H=X and TOTAL H=L	SEV ON H=X and TOTAL H=H	SEV ON H=X and TOTAL H=H
10^{-5}	x 1	H	H	H	H	LIN	- 5 A	-2 mbar, ⚠	- 6 mbar
10^{-5}	x 10	H	H	H	L	LIN	- 6 A	-3 mbar, ⚠	- 7 mbar
10^{-5}	x 100	H	H	L	H	LIN	- 7 A	-4 mbar	- 8 mbar
10^{-5}	AUTO	H	H	L	L	AUTO	- 5 A	-2 mbar, ⚠	- 6 mbar
10^{-7}	x 1	H	L	H	H	LIN	- 7 A	- 4 mbar	- 8 mbar
10^{-7}	x 10	H	L	H	L	LIN	- 8 A	- 5 mbar	- 9 mbar
10^{-7}	x 100	H	L	L	H	LIN	- 9 A	- 6 mbar	-10 mbar
10^{-7}	AUTO	H	L	L	L	AUTO	- 7 A	- 4 mbar	- 8 mbar
10^{-9}	x 1	L	H	H	H	LIN	- 9 A	- 6 mbar	-10 mbar
10^{-9}	x 10	L	H	H	L	LIN	-10 A	- 7 mbar	-11 mbar
10^{-9}	x 100	L	H	L	H	LIN	-11 A	- 8 mbar	-12 mbar
10^{-9}	AUTO	L	H	L	L	AUTO	- 9 A	- 6 mbar	-10 mbar
10^{-11}	x 1	L	L	H	H	LIN	-11 A	- 8 mbar	-12 mbar
10^{-11}	x 10	L	L	H	L	LIN	-12 A	- 9 mbar	-13 mbar
10^{-11}	x 100	L	L	L	H	LIN	-13 A	-10 mbar	-14 mbar
10^{-11}	AUTO	L	L	L	L	AUTO	-11 A	- 8 mbar	-12 mbar

SCAN coding :

SCAN	MODE 0 L	RESET SCAN L
RESET	X	L
SINGLE	H	L/H
REPEAT	L	L/H

SPEED coding:

SCAN SPEED	SPEED 3 L	SPEED 2 L	SPEED 1 L	SPEED 0 L	Filter time constant
1 ms/u	H	H	H	H	25 us
3 ms/u	H	H	H	L	75 us
10 ms/u	H	H	L	H	0.25 ms
30 ms/u	H	H	L	L	0.75 ms
0.1 s/u	H	L	H	H	2.25 ms
0.3 s/u	H	L	H	L	7.5 ms
1 s/u	H	L	L	H	25.5 ms
3 s/u	H	L	L	L	75 ms
10 s/u	L	H	H	H	0.25 s

MODE coding:

Operating mode	MODE 2 L	MODE 1 L	TOTAL L(*)	HELIUM L(*)
EMISSION OFF	H	H	H	H
TOTAL	H	L	L	H
SPECTRUM	L	H	H	H
INTEGRAL	H	L	H	H
HELIUM	L	H	H	L
DEGAS	L	L	H	H

(*) Not transmitted via J1 to the MS 112 cable

9.1.4 Analog set point signals

The set points entered on the FIRST MASS, WIDTH and SEM VOLTAGE potentiometers are derived from the $+U_{REF}$ reference voltage and conducted via the analog switch N14 to the MS 112 cable.

The analog switch disconnects the signal transmitter when the unit is on REMOTE CONTROL (ON LINE L = low) to allow the set point to be entered from outside.

The FMASS set point signal is first transmitted to analog switch N13 for preselection where either the FIRST MASS trimmer potentiometer or a fixed FIRST MASS value (for TOTAL and HELIUM) is selected according to the operating mode.

The fixed FIRST MASS values are generated by the voltage dividers R64..R71 and must be adapted to the measurement range with jumper J8.

9.2 The circuits in the MS 112 master board

(refer to schematics BG 541 008 -S)

9.2.1 Supplies

The ± 24 V supply voltages are input (J4) from the VR 112 switching controller module. They are conducted to connector J3 as the primary supply for the QME 112 and also to the voltage regulators A17..A22 for the internal current supply.

Voltage regulator A18 generates the +12 V voltage (TP54) for operating the digital CMOS circuits for MS and FP. The digital level are referenced to the DIGITAL GND D (TP56).

Reference source A17 supplies a precise and stable +10.0 V reference voltage. The –10.0 V (TP52) negative reference voltage is generated by the A16 OPAMP through inversion. Both voltages are referenced to the ANALOG GND C (TP49).

The ± 15 V supplies are generated by the A19 OPAMP amplifier stages and the A20 and A22 ± 5 V voltage regulators referenced to its outputs. The OPAMP amplifier stages function as differential amplifiers with reference to the positive or negative reference voltages. They control the low end of the voltage regulator so that its output signal is held to 15 V.

In the event of a reference voltage short circuit, the ± 15 V supplies all drop to approx. ± 4.5 V.

The ±15 V supply and the +12 V supply are conducted to the MS circuits over shorting plugs. These can be removed for troubleshooting to allow malfunctions to be pinpointed.

+12 V supply: Connector J10
+15 V supply: Connectors J12, J11
–15 V supply: Connectors J9, J8

It is also possible to isolate the ± 15 V supply for the electrometer controller section from the mass scan from connectors J8 and J11.

The internally generated supply voltages are conducted to J1 for the FP 112A front panel board. However, there must be no additional load on these voltages from the remote control input connected in parallel to the front panel connection.

An additional ± 15 V voltage isolated from the MS 0 V line over 100 Ohms is generated by Zener diodes TP44..TP46 to supply the A8 ELECTROMETER and SCAN output stages.

Other auxiliary voltages are generated by diodes and Zener diodes. The TP49 is to be used as a clean grounding point.

Electrometer controller:	–3,9 V at TP22	Mass scan :	+5,6 V at TP36
	+1,3 V at TP26		+5,1 V at TP42
	–1,3 V at TP25		(SCAN = RESET)

9.2.2 Mass scan

The mass scan ramp generator consists of the H9 dual FET input stage, the H10 dual transistor used as the constant current source, and the A14 OPAMP.

The constant current defined by resistors R140 or R141 and voltage U_{E10} charges integration capacitors C36, C37 and C38 according to the mass range selected. For this to happen, the contact for K2 must be open and FET H11 blocked. The linearly rising ramp U_{A10} occurs at TP37.

Switches K2 and FET H11 close when the selected set point has been reached or when commanded to by RESET SCAN. The integration capacitors are discharged by R158.

The SPEED 0 L...3L signals are inverted by N1 and as signals A, B, and C control the decoder part of analog switch N12. N12 closes one of the 0...4 FET analog switches according to the code received from A,B,C. This closes the feedback circuit of half of OPAMP A12. The U_{E10} negative charging voltages (see table on schematics) occur on TP35. The operating voltages from N12 (V_{DD} and V_{EE}) are adapted to the analog switch input levels.

A HIGH SPEEDS L signal results from the SPEED signal decoding. This signal is used to connect resistor R141 via relay K1. The charging current increases by a factor of 100 compared to the LOW SPEEDS settings. This means that the integrator rise time becomes 100 times shorter. With the addition of C37 and C38 it becomes 2..3x longer and then corresponds to the SPEED setting for the 200 or 300 mass range.

The rise times are set at the factory on R136 to exactly 0.1 s/u, but they can be adjusted to ± 10% on any setting if necessary. At the slower SPEED settings the load current is only 1 nA requiring the FET H9 low-level stage. Because the U_{E10} charging voltage is only 82 mV here, the offset voltage can be calibrated on R153. It must be calibrated on the 10 s/u setting and may deviate a maximum of ± 0.2 mV from 0 V (SCAN = RESET).

The H10 constant current source assures even distribution of the drain current to the two halves of H9 which keeps the offset voltage drift to a minimum.

On the faster SPEED settings, relay K2 remains on and the integrator is discharged and re-enabled by FET switch H11. On the slower SPEED settings, K2 is also activated providing the required high insulating resistance when enabled.

The summing circuit formed by OPAMP A15 supplies the SCAN output voltage to TP38. SCAN corresponds to the sum of the integrator voltage and the U_{FMASS} voltage available at TP31.

U_{FMASS} is formed by the FIRST MASS input stage which consists of the second halve of A12. When the FMASS and FMASS RTN lines are open (FP 112A connected and manual operation), A12 is operated as a high–resistance follower circuit to avoid loading the FIRST MASS potentiometer. When the remote control connection is used, the FMASS RTN line to the front panel is switched to 0 V with 10 kOhm. A12 then processes the FMASS+ and FMASS– as as differential amplifier with common mode rejection.

The integrator, and thus the mass scan, is enabled and disabled by the RESET SCAN L (TP 30) signal. The positive slope (inverted by N13/2, conducted over N15/11 and inverted again by N13/4)resets the RESET N16 flip-flop and enables the integrator via RESET L (TP40).

The RESET flip-flop is set with RESET SCAN = L via N15/10 thus resetting the integrator. This flip-flop can also be set with a TTL level from the appropriate signal output on the back panel if the line at receptibles J1 is high or the SCAN switch is on the START setting.

The RESET L signal is inverted by transistor H8. It serves as the SCAN IN PROGRESS L signal to either display the ramp generator status on the SCAN LED located on the front panel or to convey the status information to the remote control. Transistor H14 and Zener diode D86 supply a TTL level via J2 to the sockets on the back panel. These can be used to trigger an oscilloscope (REPEAT mode).

The SWIDTH+ signal level is used as the reference for the A13/1 comparator. If the integrator ramp exceeds this value, the LAST MASS H output (conducted over N15/3 and conducted again over N15/4 and N15/10 as the END SCAN H signal) sets flip-flop N16 to RESET. The ramp is reset to 0 V.

When the MODE 0 L = REPEAT H signal is on H, the END SCAN H (via N14/4 and N13/8, double inverted) sets flip-flop N16 to PAUSE. The PAUSE H (TP33) output charges C32. If this charging voltage exceeds the A13 comparator reference level the PAUSE output resets the flip-flop and C32 thus discharges.

The negative slope then enables (over N15/11 and inverted by N13/4) the RESET flip-flop and thus the ramp. A new mass scan is started automatically. The impulse generated by the PAUSE MONO circuit lasts approx. 5 ms. It assures that the RF 112 RF generator output is reset to the initial value during this pause before a new scan is initiated.

When the REPEAT H signal is on low, the END SCAN H signal from N14/4 is blocked. No pause impulse is generated and thus no new mass scan is initiated. The scan must then be reinitiated manually or with the command from the RESET SCAN L signal (SINGLE mode).

N13/10 and the preceding RC circuit generate the 0.2 s long INIT (TP32) pulse every time the supply voltage is turned on. This impulse sets the RESET flip-flop and disables the PAUSE circuit. This pre-

vents a scan from being started inadvertently when the unit is turned on which would cause the fuse in the QME to blow.

The mass scan outputs the SCAN signal, which is conducted to the FP for display. The SCAN+ and SCAN– signals are conducted to J3, via 100 Ohm for decoupling, where they are used to drive the RF generator. A separate isolating amplifier, consisting of half of A8, forms a differential circuit for rejecting common mode signals which can occur at signal recepticles connected to J2 on the back panel when a recording instrument is connected.

9.2.3 Electrometer controller

9.2.3.1 Input stage

The electrometer controller input is formed from the differential circuit in A2. It rejects the common mode voltage occuring between the EP and the MS at the EP– (TP14) and EP+ (TP15) inputs.

This stage has a zero point calibration. When the potentiometer on the FP is at ZERO,the offset at TP13 can be set at between –5 mV and +5mV. At a x100 gain, this results in ± 0.5 V at the EC+ output.

9.2.3.2 Low pass filter

The U_{A0} (TP16) output signal is conducted over an active low pass filter. This inverts the DC signal. The filter consists of the N9 and N11 analog switches, the A3 and A4 OPAMPS and an RC circuit which determines the time constant.

The signal from the capacitors used for attenuating the AC voltage content of the electrometer signal is conducted via analog switch N9 to the output of A3. The circuit for A3 is laid out in such a manner that this output carries only 1/4 of the filter output voltage U_{A1}, keeping the voltage at the inputs of N9 within the permissible limit. The –3.9V at V_{EE} allow negative signals to be processed.

A3's precision input determines the accuracy of the electrometer controller. The low input current from A3 is compensated on trimmer potentiometer R49 to maintain the voltage drop at high-impedance resistors R45, R55 at under 0.1 mV.

The R55, C10 RC circuit is permanently connected. All other resistors are switched on and off by N11, the capacitors by N9, according to the speed setting. The three shortest time constants are formed by R57 and (in sequence) C10, C11 and C12. The next three time constants are formed by R56, and the last by R55. The total of nine time constants are proportional to the SPEED settings. Their value is RxC/4 as a result of stage A4 and is selected so that the mass peak height during a scan is not affected.

The analog switches are driven by the decoded SPEED signals. This decoding is different from the decoding for the mass scan. It is developed by the "BCD 1 out of 10" encoder N4 and gates N7 and N8 connected to its output. The decoding is explained in the decoding table.

9.2.3.3 x10, x100 amplifier and limiter

The filtered signal is conducted over two virtually identical amplifiers (gain factor 10) so that the 10x electrometer signal is available at output U_{A2} and the 100x at output U_{A3} (TP28).

OPAMP A7 forms the first stage. At R90, the entire post amplifier offset is minimized. The precision of the A6 amplifier used as the second stage makes an additional adjustment unnecessary.

The inclusion of diode networks and the transistor circuits H3, H4 and H5 at the inputs prevents overdriving (and thus saturation) of the OPAMP. Otherwise a smaller mass peak following a larger peak can get "swallowed up" in a fast scan.

The following A9, A10 and A11 precision rectifier circuits effect the outputs and limit the signal to exactly 10.00 V. This function is necessary for forming the quasi-logarithmic range for the AUTO setting. The first stage, A7, provides accurate limitation only for negative (at EC+ positive output) signals. For positive signals (at EC+ negative) the limitation is formed by the circuit with D51, D52. This has the function of protecting A7 from overdriving.

9.2.3.4 Gain selector

The gain selector stage consists of OPAMP A5, analog switch N10 and a resistance circuit. Depending on the code on the GAIN line, one of the x1, x10, or x100 amplified electrometer signals is connected through to the feedback circuit of A5 via FET switch N10. There it is inverted and transmitted to output EC+ (TP24).

When the unit is on the AUTO setting, all inputs are enabled. The sum generated by the resistor network is formed at the output. Based on the limiter characteristics of the x10 and x100 stage, breakpoints occur in the output voltage characteristic when the input signal $U_{A1} = 0.1$ V and 1V. The values of the resistance were chosen to obtain an output voltage of 10 V when $U_{A1} = 10$ V and the output curve is as shown in the illustration QUASILOGARITHMIC AMPLIFICATION (refer to the section OPERATION OF THE ELECTROMETER AMPLIFIER).

The GAIN signals are decoded by inverters N6/2,4 and gates N5 and N6/3,10, 11. Inputs A, B and C for N10 operate one analog switch each.

The output for A5 can be short circuited with the CLR EC L signal over the FET's H16 and H15. This function is only operative when the unit is in remote control.

Outputs EC+ and EC– supply the electrometer signal for the front panel display and thus also for the programming unit evaluation.

The electrometer signal is conducted over that half of differential amplifier A8 used as the common mode rejector and J2 to the signal recepticle on the back panel. This signal can be processed by a connected recording instrument.

Internal offset calibration:

1. Short circuit lines EP– (TP14) and EP+ (TP 15) with jumpers or at least disconnect the cable at connector J3 (QME)
2. Connect the DVM with L0 to TP17 (0 V A)
3. Calibration and check

Voltage	Test point	Calibration to 0 V	Check 0 V	Comments
U_{OS}	13	+/-0,1 mV		Potentiometer ZERO
U_{A0}	16		+/- 2 mV	Offset A2
U_{A0}	16	+/-0,2 mV		Potentiometer ZERO

Voltage	Test point	Calibration to 0 V	Check 0 V	Comments
U_{A1}	23		+/- 2 mV	SPEED 0,1 ms/u
U_{A1}	23	+/-0,1 mV		Potentiometer ZERO
U_{A1}	23		+/-1,5 mV	SPEED 10 s/u
U_{A1}	23	+/-0,2 mV		Potentiometer R49
U_{A1}	23		+/-0,2 mV	SPEED 0,1 s/u
U_{A2}	27	+/- 1 mV		Potentiometer R90
U_{A3}	28		+/-20 mV	
U_{A3}	28	+/-10 mV		Potentiometer R90

4. Checks:

RANGE	Switch GAIN	Switch SPEED	Test point	Check 0 V	Comments
10^{-5}	x1	0,1 s/u	24	+/-10 mV	
10^{-6}	x10	0,1 s/u	24	+/-12 mV	
10^{-7}	x100	0,1 s/u	24	+/-20 mV	
10^{-7}	x100	all	24	+/-30 mV	Turn the SPEED switch through all settings
10^{-7}	AUTO	----	24	+/-15 mV	

5. Calibration and checks:

Voltage	Test point	RANGE	GAIN	Calibration/ check	Comments
U_{A4}	24	10^{-6}	x10	A: +/-2 mV	Poti ZERO
U_{29}	29	10^{-6}	x10	K: +/-15mV	DVM LO an TP 44
U_{A4}	24	10^{-7}	x100	A: +/-10mV	DVM LO an TP 17

6. Remove the jumpers from TP14 and TP 15

7. Comments: Calibrate the zero point with an electrometer controller that has been checked and calibrated according to the section OPERATION OF THE ELECTROMETER AMPLIFIER

9.2.4 Driver circuits for the QME

The digital transmission lines are connected via inverter N2 to connector J3 to drive the QME 112. They are protected from overvoltage at the inputs and outputs. The signals are MODE, RANGE and DSP EMIS L. Receiver line EMIS OK L is connected to an inverter and reinverted by transistor H1, which drives the LED on the FP and supplies a level to the external programming unit. Pull–up resistor R27 simulates emission not turned on as soon as the QME is not connected.

Driver amplifier A1 supplies the SEM+ output to drive the HV 112 SEM supply. Resistor R15 decouples the 0 V lines. Output A1 contains the D1, D7 and R17 protective circuits.

The driver circuits can drive a shielded signal cable up to approx. 200 meters long (refer to the QMN 112 operating instructions)

9.2.5 Electrical data for the MS 112

Inputs

Supply voltages	U_{S+}:	+19..+30 V	0,26 A
	U_{S-}:	–19..–30 V	0,16 A
Outputs and internal operating voltages:	U_{CC}:	+14..+24 V at U_{S+} = 24 V over R_V = 28 Ohm, externally loaded	
	+15 V:	+15 V ± 0,15 V	
		Internal load	70 mA max.
		External load	–
	–15 V:	–15 V ± 0,3 V	
		Internal load	55 mA max.
		External load	5 mA max.
	+12 V:	+12 V ± 0,7 V	
		Internal load	70 mA max.
		External load	10 mA max.
	$+U_{REF}$:	+10,0 V ± 20 mV	
		Internal load	2,0 mA max.
		External load	3,5 mA max.
	$-U_{REF}$:	–10,0 V ± 40 mV	
		Internal load	2,0 mA max.
		External load	–

external load reserved for FP 112A

The electronic circuits for the MS can be separated from the ± 15 V and +12 V supplies with jumpers J8, J9, J10, J11 and J12.

All voltages are short circuit protected against 0 V.

Ground lines for analog circuits: 0 V A, B and C

Ground lines for digital circuits: 0 V D and E

Star point at 0 V terminal connector J4 (TP49).

9.3 24 V VR 112 switching regulator
(see schematics BG 514 006 -S)

9.3.1 Circuit description

The VR 112 is a pulse-width-modulated switching regulator which uses an oscillating frequency of 25 kHz to convert the DC input voltage of approx. 30 ...60 V into a regulated output of +24.2 V.

The rectifier and input fuse F1 are mounted on the circuit board. The charging capacitor is mounted externally and connected with short twisted wires.

Zener diode D1 and transistor H1 supply an internal operating voltage of 14.5 V typ. to TP1 to operate the switching regulators N1 and the crow bar N2 IC's. N1 supplies the +5V nominal reference voltage. An OPAMP in N1 compares the actual value generated by voltage divider R18, R19, R20 at input –IN with set point $U_{REF}/2$ at +IN . The resulting output drives the comparator circuit in N1. The comparator shortens or lengthens the duty cycle of the square-wave signal generated by the internal oscillator. The frequency of this signal is determined by the external circuit C11 and R33, R34. A driver pair in N1 is coupled with the emitters and drives transistor H4, the collector that controls the power switch combination H3 and H2. An active diode pump consisting of transistors H5 and electrolytic capacitor C4 collects the base charge of transistor H2, together with the control and protection circuits D2, D3, R10, C3, at the moment it is switched off. This reduces switching loss.

Storage choke L1, free-wheeling diode D4, and electrolytic capacitor C5 constitute the output circuit. Measuring resistors R21..R24 are connected to the 0 V return.

When the voltage drop caused by the load current exceeds the value set with trimmer potentiometer R16, the current limiting circuit in N1 is enabled and the duty cycle regulated back. The factory setting for the short-circuit current is 2.5 A. The current limitation features a fold-back characteristic i.e. an overload causes a drop in the output current as well as the output voltage.

The VR 112 features a low-input shut-down, implemented by H6, which shuts off the regulator when the input voltage falls below the value set on trimmer potentiometer R14. A crowbar circuit (N2 and thyristor D9) is activated if the output voltage exceeds approx. 26 V. If this occurs, N2 switches on D9 which causes fuse F1 to blow via R29, R30. The output is also short-circuited via D8. LED D5 indicates when voltage is present at the output.

The exact value of the output voltage can be fine-adjusted with trimmer potentiometer R19. The oscillating frequency is set at the factory on R34 to 25 kHz.

9.3.2 Electrical data for the VR 112

Electrical specifications	min	typ	max	Dim
Output voltage for no-load U_A (0)	24,1	–	24,3	V
Ripple			50	mV p-p
Regulating accuracy $\frac{\Delta U_A}{U_A}$		0,2		%
Load current I_L	0		2,0	A
Current limit foldback	2,4		2,6	A
Over-voltage protection		at U_A >	+26 V	
Low-input protection		at U_C <	29 V	
Charging capacitor C_L		3300 µF/63 V		
Input DC voltage U_C	31 V		58	V
Ripple at U_C, 2 · f			4	V p-p
Input current I_E				
–, Peak inrush I_p			80	A p
–, Peak current I_{RR}			6	A p
–, Effective value I_{eff}			3,1	A eff
Input sine voltage U_E	26		43	V eff
Frequency of U_E, f	48		63	Hz
Series resistance R_S	0,7		1,6	Ω
Ambient temperature operational Tamb	0		60	C
Required heat sink			7	K/W
Fuse F1			4 A	fast

These data are valid for a supply with transformer BG 528 647 and a mains voltage fluctuation of ±10%

10. REMOTE CONTROL

The QMS 112A can be remote controlled over the QDP back panel connection.

10.1 Interface

10.1.1 Pin assignment for QDP connector

Pin number	Signal line
1	(Zero cw)*
2	(Zero s)*
3	(Zero ccw)*
4	SEM+
5	SEM–
6	EC+
7	EC–
8	SCAN+
9	CLR EC L
10	EMIS OK L
11	RANGE 1 L
12	RANGE 0 L
13	DSP EMIS L
14	MODE 2 L
15	MODE 1 L
16	MODE 0 L
17	GAIN 1 L
18	GAIN 0 L
19	SPEED 3 L
20	SPEED 2 L
21	SPEED 1 L
22	SPEED 0 L
23	ON LINE L
24	SCAN IN PROGRESS L
25	RESET SCAN L
26	SIG GND
27	SWIDTH+
28	FMASS–
29	(FMASS RTN)*
30	FMASS+
31	($+U_{REF}$)*
32	(REF GND)*
33	DIG GND
34	+12V
35	Ucc
36	(DSP GND)*
37	($-U_{REF}$)*

View of the connector

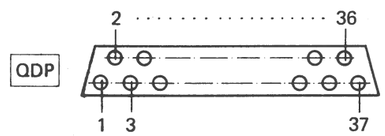

Logic assignment:

There is an H behind the signal for positive logic (high true), and an L for negative logic (low true). For example, EMIS OK L indicates a low logic level when the emission is ok.

( )* signal lines not used

10.1.2 Signal specifications

ON/OFF line switchover signal

Signal designation	ON LINE L	
Signal level	H level:	+11.3...+12.7 V
	L level:	0...+0.8 V
		referenced to DIG GND
Load	internal pull-up resistor to +12 V (4.7 kOhm) refer to diagram BG 541 316 -S	

Digital input signals

Signal designation	SPEED 0 L..SPEED 3 L MODE 0 L..MODE 2 L GAIN 0 L, GAIN 1 L RANGE 0 L, RANGE 1 L RESET SCAN L, CLR EC L	
Signal level	H level:	+10.0..+12.7 V
	L level:	0..+1.75 V
		referenced to DIG GND
Load	internal pull-up resistors to +12 V (min. 4.7 kOhm) refer to schematics BG 542 008 -S, connector J1	
	$I_{INPUT\ LOW}$:	max. –3 mA

Digital output signals

Signal designation	SCAN IN PROGRESS L EMIS OK L	
Signal level	H level:	+4.5..+5.25 V
	L level:	0..+0.4 V
		with reference to DIG GND
Permissible load	$I_{OUTPUT\ High}$:	40 µA
	$I_{OUTPUT\ Low}$:	1.6 mA

Analog input signal

Signal designation	FMASS+ referenced to FMASS– SWIDTH+ referenced to EC– SEM+ referenced to SEM–	
Signal range	0..+10.0 V nom	±15 V max.
Input resistor	> 300 kOhm for SWIDTH+ and SEM+ 40 kOhm for FMASS+	

Analog output signals

Signal designations	SCAN referenced to EC– EC+ referenced to EC–	
Signal range	SCAN+:	0..+10.2 V
	EC+:	0..±10.0 V nom ±15 V max.
Permissible load	> 100 kOhm	

10.1.3 Information on use

When constructing an interface circuit, the following points must be taken into consideration:

- The ON/OFF line switchover is effected by ON LINE L. It is referenced to +12 V in the QMS 112A with a pull up. The QMS is switched to on-line operation when the signal is low.

  The conditions for off-line operation are: all the digital outputs on the interface are high value and all analog outputs are off.

  The easiest solution is to fit a fixed jumper on the interface between ON LINE L and DIG GND so that on-line operation is automatic when the interface is connected.

- All analog input signals (FMASS+, SWIDTH+, SEM+) should be buffered when input. The interface GND is their reference potential.

- The EC+ and SCAN+ analog output signals are to be decoupled with reference to the EC-differential.

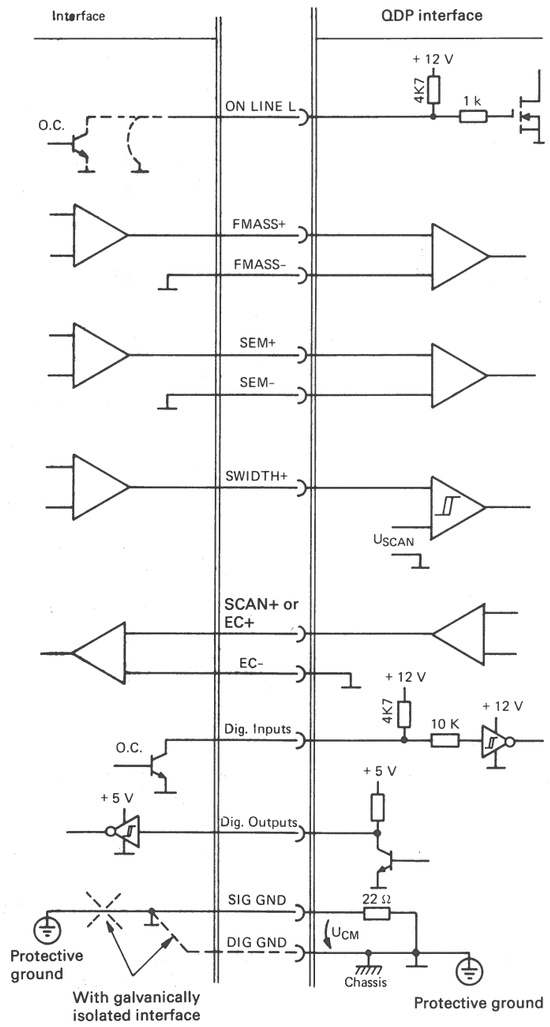

- The digital outputs are referenced to +12 V in the QMS 112A with pullup resistors. For this reason controlling with open collector drivers is recommended.

- The EMIS OK L and SCAN IN PROGRESS L digital output signals are referenced to +5V with pull up resistors in the QMS 112A.

- All signal lines not used according to the PIN ASSIGNMENT section may not be subject to any external load.

10.1.3.1 Interface without galvanic isolation

- The GND interface must be connected to protective ground.

- The GND interface must be connected to the QDP connector's SIG GND.

- Common mode signal U_{CM} between interface GND or SIG GND and DIG GND may be a maximum of $\pm 0.5\ V_p$. It adds itself directly to the SWIDTH+ signal and should not exceed $\pm 10\ mV_p$ for optimum conditions.

- The following are ways of bypassing this restriction:

  - Don't used SCAN WIDTH. A SCAN can be generated directly by the computer by constantly increasing the FIRST MASS.

  - Set the SCAN WIDTH to maximum i.e set SWIDTH+ to approx. 11 V. A scan can be started by the computer and cut off again after the required time.

10.1.3.2 Interface with galvanic isolation

- There are no common mode problems with a galvanically isolated interface. Here DIG GND is to be used as the reference potential i.e. the GND interface is connected to DIG GND and not to interface GND.

10.2 Remote control

It is possible to switch the QMS 112 from manual operation to a remote controlled measurement system by activating ON LINE L.

With the exception of the display and the ZERO trimmer potentiometer, all front panel controls are disabled when this switchover is made. This status is indicated on the REM (remote) LED.

The remote control must be made in an analogous fashion to operation from the front panel controls.

The following subsections will handle the control functions using the following symbols:

H = high level
L = low level
L/H = low-high slope
X = any status

Mass range = 0..100 or 0..200 depending on system configuration

10.2.1 Electrometer

Measured data are output on the EC+ and EC– line as analog signals. These signals are identical to the signals available on the ELECTROMETER output on the back panel (see "ELECTROMETER output" section).

10.2.1.1 Electrometer measurement range

The mass range selection is made with the RANGE 0 L and the RANGE 1 L signals.

RANGE EP 112	RANGE 1 L	RANGE 0 L
10^{-5} A	H	H
10^{-7} A	H	L
10^{-9} A	L	H
10^{-11} A	L	L

10.2.1.2 Post amplification

The post amplification gain factor is defined by the GAIN 0 L and GAIN 1 L signals.

GAIN	GAIN 1 L	GAIN 0 L
x 1	H	H
x 10	H	L
x 100	L	H
AUTO	L	L

10.2.1.3 Zero point calibration

The zero point adjustments for the QMS 112 A and the external data acquisition system must be carried out separately.

– Data acquisition system

To calibrate the interface circuit the analog signal can be set to 0 V with the CLR EC L digital control signal.

CLR EC L = H: ELM signal at output EC+
CLR EC L = L : Output EC+ is short circuited to EC=

– QMS 112A

The ZERO trimmer potentiometer remains enabled. The calibration procedure is described in the MAINTENANCE section.

10.2.2 Mass scan

10.2.2.1 FIRST MASS

The initial mass must be input on the FMASS+ line.

Signal assignment:

$$U_{FMASS+} = \frac{\text{FIRST MASS} \times 10\ \text{V}}{\text{Mass range}}$$

10.2.2.2 SCAN WIDTH

The mass scan width must be input on the SWIDTH+ line.

Signal assignment:

$$U_{SWIDTH+} = \frac{\text{WIDTH} \times 10\ \text{V}}{\text{Mass range}}$$

10.2.2.3 SCAN SPEED, filter time constant

The mass scan speed is defined by the SPEED 0 L..SPEED 3 L digital input signals. The filter time constant for the electrometer signal filtering is selected parallel to it.

SCAN SPEED	SPEED 3 L	SPEED 2 L	SPEED 1 L	SPEED 0 L	Filter time constant
1 ms/u	H	H	H	H	25 us
3 ms/u	H	H	H	L	75 us
10 ms/u	H	H	L	H	0,25 ms
30 ms/u	H	H	L	L	0,75 ms
0,1 s/u	H	L	H	H	2,25 ms
0,3 s/u	H	L	H	L	7,5 ms
1 s/u	H	L	L	H	25,5 ms
3 s/u	H	L	L	L	75 ms
10 s/u	L	H	H	H	0,25 s

10.2.2.4 SCAN functions

The start and stop functions for the mass scan are effected with the MODE 0 L and RESET SCAN digital signals:

SCAN	MODE 0 L	RESET SCAN
RESET	X	L
SINGLE	H	L/H
REPEAT	L	L/H

10.2.3 Operating modes

Operating modes are selected using the two digital signals MODE 1 L and MODE 2 L:

MODE	MODE 2 L	MODE 1 L
EMISSION OFF	H	H
SPECTRUM	L	H
INTEGRAL	H	L
DEGAS	L	L

The individual operating modes retain their functions as described in the OPERATING MODES section. The two exceptions are TOTAL and HELIUM. They must be generated in remote control operation from the operating modes given above.

– TOTAL corresponds to the INTEGRAL mode at FIRST MASS = 8
– HELIUM corresponds to the SPECTRUM mode at FIRST MASS = 4

10.2.4 SEM VOLTAGE

The SEM high voltage control is effected with an analog signal on the SEM+ line.

Signal assignment:

$$U_{SEM} = \frac{1\ V \times HV \times 9{,}762}{4\ kV} + 0{,}238\ V$$

HV = SEM high voltage in [kV] U_{SEM} in [V]

The high voltage supply only works linear in the 0..3 kV range. The signal range for the U_{SEM} remote control is thus tobe limited to potentials between +0.24..7.56 V (refer to the SEM OPERATION diagram)

10.2.5 Emission

The QME mass filter electronics supply an emission status report with the EMIS OK L signal.

EMIS OK L = H: Emission is switched off or deviates from the set point.

EMIS OK L = L: The emission corresponds to the set point.

The QME can be switched to emission current measurement with the DSP EMIS L control signal. The emission current value is output instead of the electrometer measured data. The GAIN post amplification factor must be set on x1, however, for proper weighting.

DSP EMIS L = H: The EC+ line conducts the amplified electrometer signal

DSP EMIS L = L: EC+ conducts the emission current measured data
(2 V correspond to 1 mA emission)

When the display is used to read the emission current, the DVM switch must be set on EMISSION. The display would be incorrect if the switch were on ELECTROM. This can be recognized when the two decimal points light at the same time.

11. SPARE PARTS

Order spare parts according to the enclosed spare parts list. When ordering be sure to state the name and model of the unit and its serial number as given on the nameplate.

Example:

1 pc. Potentiometer, 2 W, 10 kOhm, Order Nr. B 4879 410 UE, as per spare parts list BG 800 243 E, Item 5

12. ACCESSORIES

Accessories supplies

Europa connector for mains power connection

Spare fuses

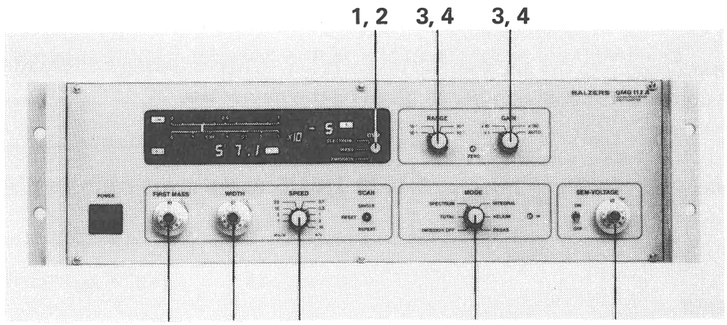

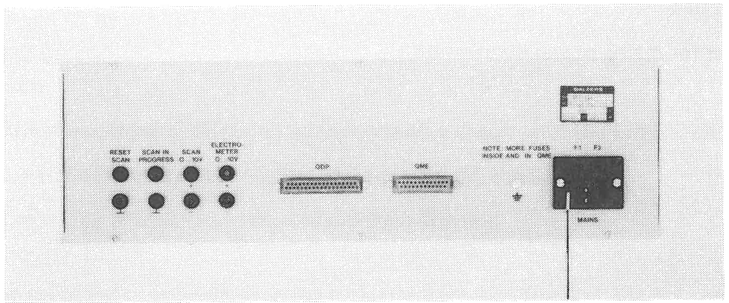

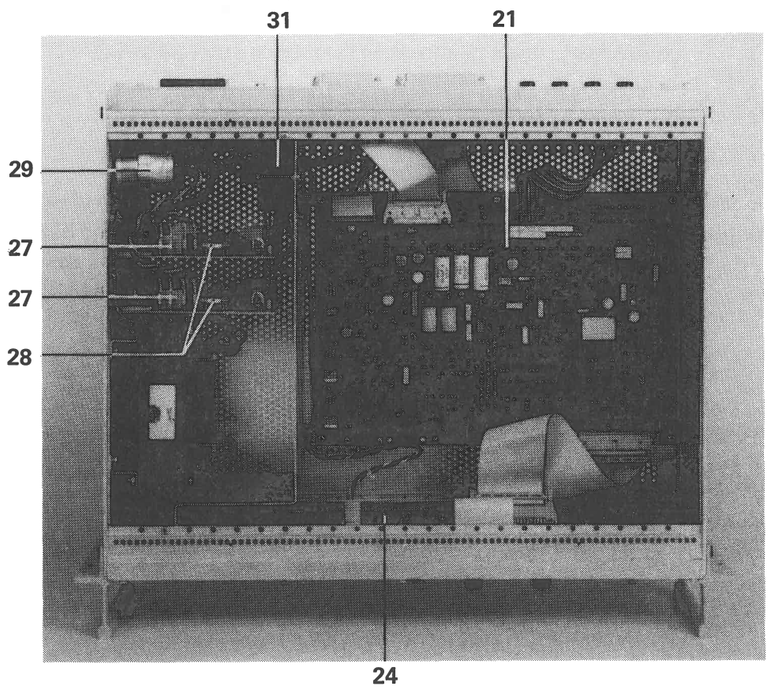

			Description Teil	Item Pos.	Order No. Bestell-Nr.	S	Reference Bemerkungen
1			Rotary knob / Drehknopf, sw 10-4	1	B 4797 107 FM		DVM
1			Cover / Deckel, gu, K-ϕ 9 + 10	2	B 4797 115 DA		
4			Rotary knob / Drehknopf, sw 14-4	3	B 4797 107 KM		RANGE, GAIN, SPEED
4			Cover / Deckel, gu, K-ϕ 14	4	B 4797 115 KA		MODE
3			Potentiometer, 2 W, 10 kΩ	5	B 4879 410 UE		FIRST MASS, WIDTH
3			Drive / Antrieb, r. 25 A, ϕ 6,35	6	B 4797 614 DE		SEM-VOLTAGE
				7			
				8			
				9			
				10			
2			Fuse / Gerätesicherung, 5 x 20 mm, 1,25 ATT	11a	B 4666 592 EC		MAINS 208 ... 240 VAC
2			Fuse / Gerätesicherung, 5 x 20 mm, 2,5 ATT	11b	B 4666 592 EJ		MAINS 115 VAC
				12			
				13			
				14			
				15			
				16			
				17			
				18			
				19			
				20			
1			Haster board / Masterprint MS 112	21	BG 528 670 -U		
7			Jumper / Kurzschlussstecker, 65474-004		B 4713 102 AD		on / auf MS 112
				22			
				23			
1			Frontpanel / Frontprint FP 112 A	24	BG 546 390 -T		
3			Jumper / Kurzschlussstecker, 65474-004		B 4713 102 AD		on / auf FP 112 A
				25			
				26			
2			Switching regulating / Schaltnetzteil VR 112	27	BG 528 650 -U		
2			Fuse / Gerätesicherung, 5 x 20 mm, 4,0 AF	28	B 4666 125		on / auf VR 112
2			Capacitor / Kondensator, 3300 μF, 63 VDC	29	B 4902 533 R4		
				30			
1			DC/DC Converter / Schaltregler, 5 V, 1,5 A	31	B 5039 101 AE		

Spare Parts for / Ersatzteile zu

Control unit / Steuergerät QMS 112 A

BALZERS

BG 800 243 E/2

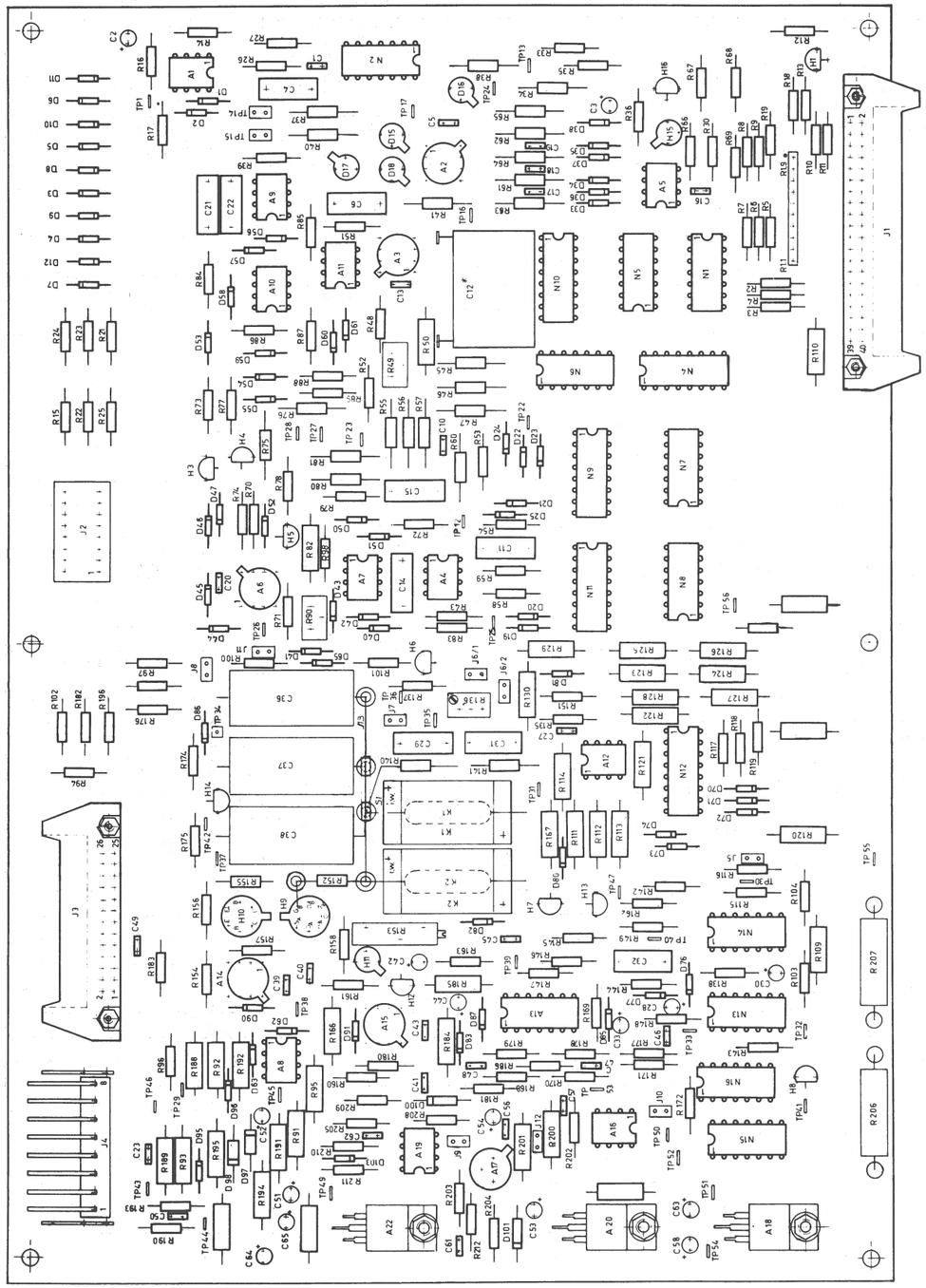

Master MS 112

BG 528 670 - U

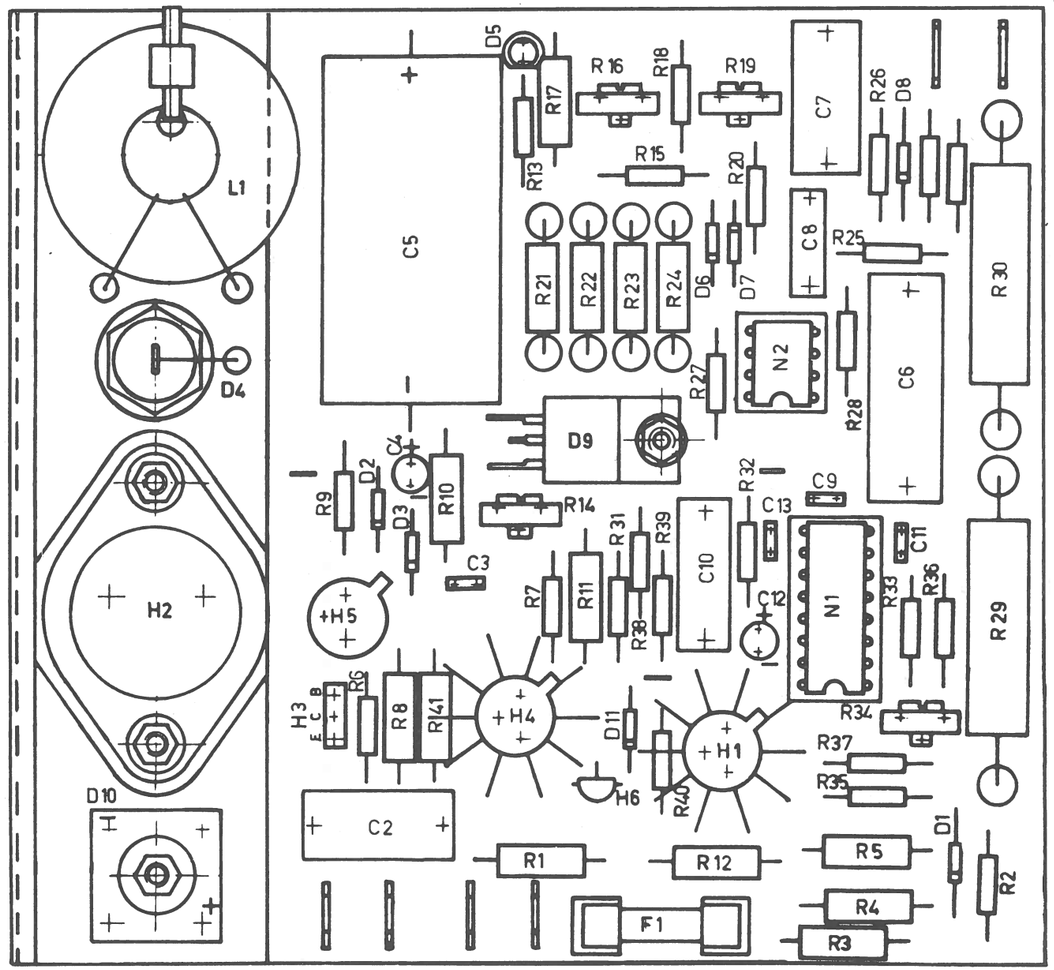

Switching Regulator / Schaltnetzteil VR 112

BG 528 650 - U

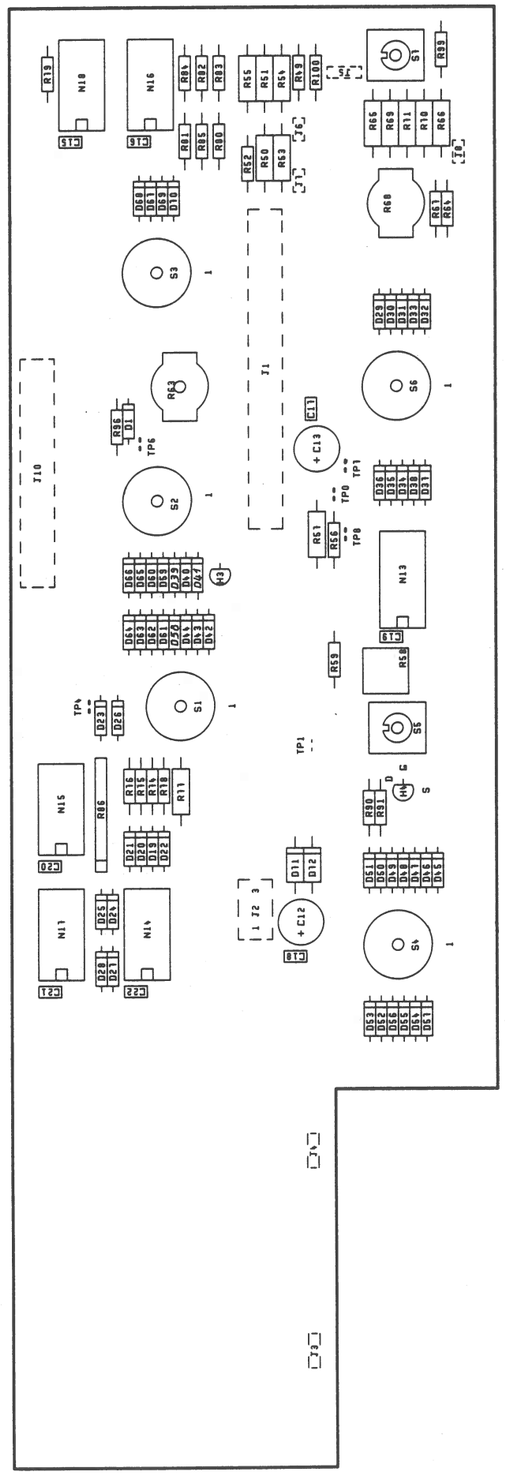

Frontpanel / Frontprint FP 112 A

BG 546 331 -Z

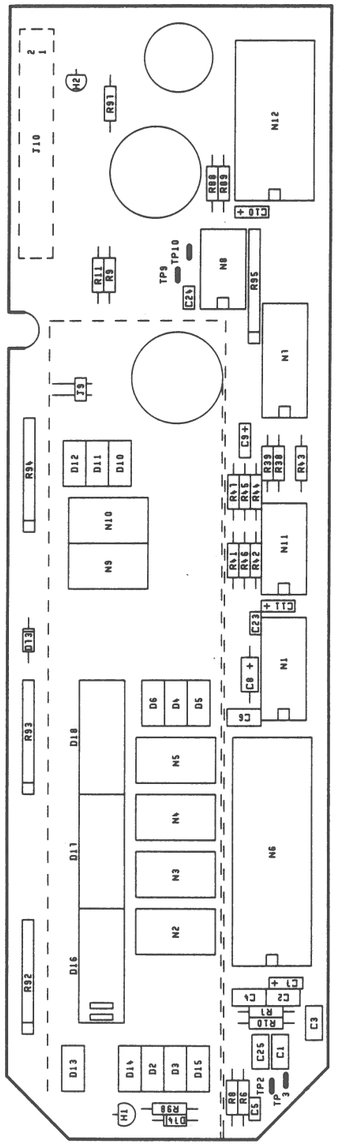

Display pc board / Anzeigeprint

BG 546 321 -Z